SUSAN DUNN

PURITY COLLECTION

Custom Plated | Artisan Made

TOWEL ROD

A-PU-005-00

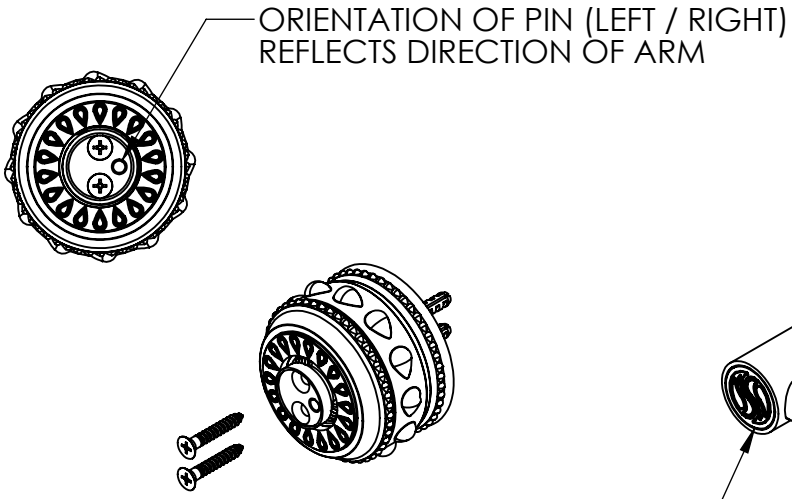

STEP 1
WITH SCREWS VERTICALY ALIGNED
SCREW ESCUTCHEON TO WALL

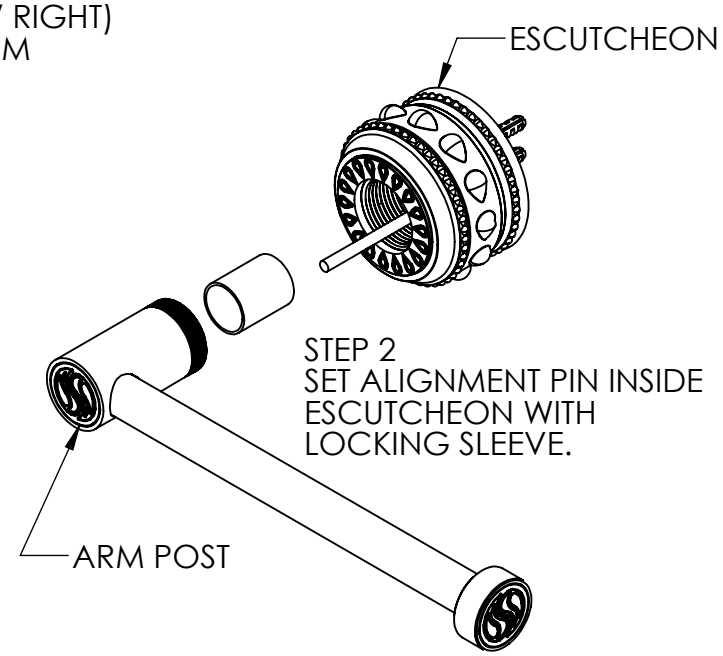

STEP 2
SET ALIGNMENT PIN INSIDE
ESCUTCHEON WITH
LOCKING SLEEVE.

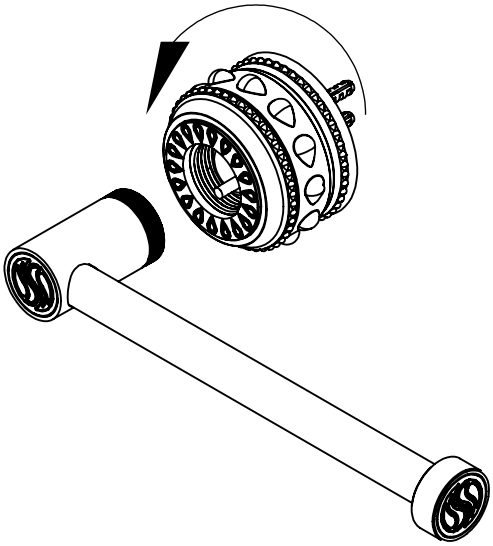

STEP 3
ALIGN ARM POST TO PIN AND TURN
ESCUTCHEON COUNTERCLOCKWISE TO
TIGHTEN ARM POST TO ESCUTCHEON.

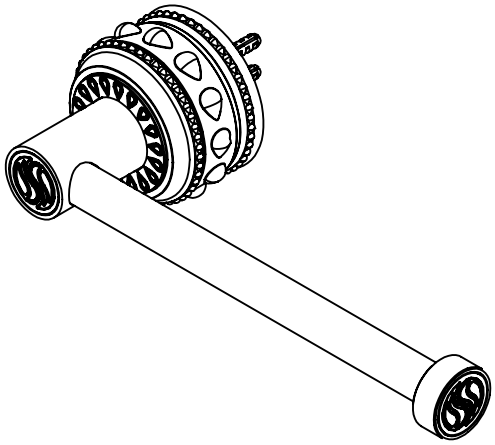

STEP 4
CLEAN ALL SURFACES OF
FINGERPRINTS WITH
POLISHING CLOTH

Confidential © Copyright Susan Dunn Inc. · All Rights Reserved
Global Headquarters: Rancho Santa Fe, CA · Phone: 800.772.2772
www.susandunn.com · email: concierge@susandunn.com

Note: Measurements are subject to change or cancellation. No responsibility is assumed for use of superseded or voided pages.

LUXURY COLLECTIONS · EST. 1987 · SUSAN DUNN